DS-2DE5230W-AE(3)
2MP 30X Network PTZ Dome Camera

Hikvision DS-2DE5230W-AE(3) PTZ Dome Cameras are able to capture high quality images in low light environment with its black anti-reflective glass. Embedded with 1/3'' progressive scan CMOS chip makes DWDR and 1920×1080 real-time resolution possible. With the 30X optical zoom lens, the camera offers more details over expansive areas.

Hikvision DS-2DE5230W-AE(3) PTZ Dome Cameras also features a wide range of functions, including intrusion detection, line crossing detection and audio exception, benefitting users with great improvement on security efficiency, more importantly, with key events / objects being recorded for further forensic needs.

Key Features

- 1/3" Progressive Scan CMOS
- 1920×1080
- 30X Optical Zoom
- DWDR
- 3D intelligent positioning function
- Support EZVIZ cloud P2P
- PoE+ / 24VAC power supply

Function Description

Basic function

- High performance CMOS, up to 1920×1080 resolution.
- ±0.1° Preset Accuracy.
- ONVIF(Open Network Video Interface Forum), CGI(Common Gateway Interface), PSIA(Physical Security Interoperability Alliance), to ensure greater interoperability between different platforms and compatibility.
- 3D intelligent positioning function.
- 3D DNR.
- IP66 standard(outdoor dome).
- 2 alarm inputs and 1 alarm outputs.
- 1 audio input and 1 audio output.

Smart Function

- Smart image processing: support defog, HLC/BLC.
- Smart codec: low bit rate, ROI.
- Smart detection: support intrusion detection, line crossing detection, audio exception detection.

Camera function

- Auto iris, auto focus, auto white balance, backlight compensation and auto day & night switch.
- Min. Illumination: Color：0.05Lux @ (F1.6, AGC ON), B/W：0.01Lux @ (F1.6, AGC ON).
- Support 8 privacy masks.

PTZ functions

- 360° endless pan range and -5°-90° tilt range
- 300°/s Pan Preset Speed and 200°/s Tilt Preset Speed
- 0.1°-250°/s Manual Pan Speed and 0.1°-150°/s Manual Tilt Speed
- 300 presets programmable; preset image freezing capability
- 8 patrols, up to 32 presets per patrol Park action.
- Power-off memory: restore PTZ & Lens status after reboot.

Network function

- H.264/MJPEG video compression.
- H.264 encoding with Baseline/Main/High profile.
- ROI(Region of Interest) encoding.
- Built-in Web server.
- Onboard storage, up to 128GB.
- Support up to 8 NAS storage; Edge recording(transmit the videos from SD card to the NAS after network resumed).
- HTTPS encryption and IEEE 802.1X port-based network access control.
- Support dual-streams.
- Multiple network protocols supported: IPv4/Ipv6, HTTP, HTTPS, 802.1X, QoS, FTP, SMTP, UPnP, SNMP, DNS, DDNS, NTP, RTSP, RTP, TCP, UDP, IGMP, ICMP, DHCP, PPPoE.

Specifications

Model	***DS-2DE5230W-AE(3)***
Camera Module	
Image Sensor	1/2.8'' Progressive Scan CMOS
Min. Illumination	F1.6, AGC On: Color: 0.05 lux, B/W : 0.01 lux,
Max. Image Resolution	1920×1080
Focal Length	4.3-129mm, 30x
Digital Zoom	16X
Zoom Speed	Approx.3s(Optical Wide~Tele)
Angle of View	65.5-2.11 degree (Wide~Tele)
Min. Working Distance	10~1,500mm(Wide~Tele)
Aperture Range	F1.6-F5.0
Focus Mode	Auto / Semiautomatic / Manual
DWDR	Support
S / N Ratio	≥ 52dB
Shutter Time	1-1/10,000s
AGC	Auto / Manual
White Balance	Auto / Manual /ATW/Indoor/Outdoor/Daylight lamp/Sodium lamp
Day & Night	IR Cut Filter
Privacy Mask	8 privacy masks programmable
Enhancement	3D DNR, BLC
Pan and Tilt	
Range	Pan:360° endless; Tilt: -5°~90°(Auto Flip)
Speed	Pan Manual Speed: 0.1°~250°/s, Pan Preset Speed: 300°/s Tilt Manual Speed: 0.1°~150°/s, Tilt Preset Speed: 200°/s
Number of Preset	300
Patrol	8 patrols, up to 32 presets per patrol
Park Action	Preset / Patrol / Pattern / Pan scan / Tilt scan / Random scan / Frame scan / Panorama scan
Scheduled Task	Auto scan / Frame scan / Random scan / Patrol / Pattern / Preset / Panorama scan / Tilt scan / Dome reboot / Dome adjust / Aux output
Features	
Detection	Intrusion detection, Line crossing detection, Audio exception detection, Motion detection
ROI encoding	Support
Alarm	
Alarm I/O	2/1
Alarm Trigger	Intrusion detection, Line crossing detection, Audio exception detection, Motion detection, Dynamic analysis, Tampering alarm, Network disconnect, IP address conflict, Storage exception
Alarm Action	Preset, Patrol, Pattern, Recording, Relay output, Upload center, Upload FTP, Email linkage

Input/Output	
Audio Input	1 Mic in/Line in interface, line input: 2-2.4V[p-p]; output impedance: 1KΩ, ±10%
Audio Output	1 Audio output interface, line level, impedance: 600Ω
Network	
Ethernet	10Base-T / 100Base-TX, RJ45 connector
Main Stream	50Hz: 25fps(1280×960)、25fps(1280×720) 60Hz: 30fps(1280×960)、30fps(1280×720)
Sub Stream	50Hz:25fps(704×576)、25fps(352×288)、25fps(320×240) 60Hz:30fps(704×480)、30fps(352×240)、30fps(320×240)
Image Compression	H.264/MJPEG
Audio Compression	G.711ulaw/G.711alaw/G.726/MP2L2/G.722
Protocols	IPv4/IPv6, HTTP, HTTPS, 802.1X, QoS, FTP, SMTP, UPnP, SNMP, DNS, DDNS, NTP, RTSP, RTP, TCP, UDP, IGMP, ICMP, DHCP, PPPoE
Simultaneous Live View	Up to 20 users
Mini SD Memory Card	Support up to 128GB Micro SD/SDHC/SDXC card. Support Edge recording
User/Host Level	Up to 32 users,3 Levels: Administrator, Operator and User
Security Measures	User authentication (ID and PW); Host authentication (MAC address); IP address filtering
System Integration	
Application programming	Open-ended API, support ONVIF, PSIA and CG , Support EZVIZ cloud P2P
Web Browser	IE 7+, Chrome 18 +, Firefox 5.0 +, Safari 5.02 +
Power	PoE+ &24 VAC, Max.22W
Working Temperature	-30°C ~ 65°C (-22°F ~ 149°F)
Humidity	90% or less
Protection Level	IP66, TVS 4,000V lightning protection, surge protection and voltage transient protection
Certification	FCC, CE, UL, RoHS, IEC/EN 61000, IEC/EN 55022, IEC/EN 55024, IEC /EN60950-1
Dimensions	Φ 220×305mm(Outdoor) Φ 183.4×243mm(Indoor) Φ 245×236mm (In-ceiling)
Weight (approx.)	3kg (6.61lbs)
Mount Option	Long-arm wall mount: DS-1602ZJ; Corner mount: DS-1602ZJ-corner; Pole Mount: DS-1602ZJ-pole; Power box mount:DS-1602ZJ-box;

Order Models

- DS-2DE5230W-AE, PoE+, 24VAC, Outdoor
- DS-2DE5230W-AE3,PoE+, 24VAC, Indoor

NOTE: indoor models support ceiling or in-ceiling mount.

Dimensions

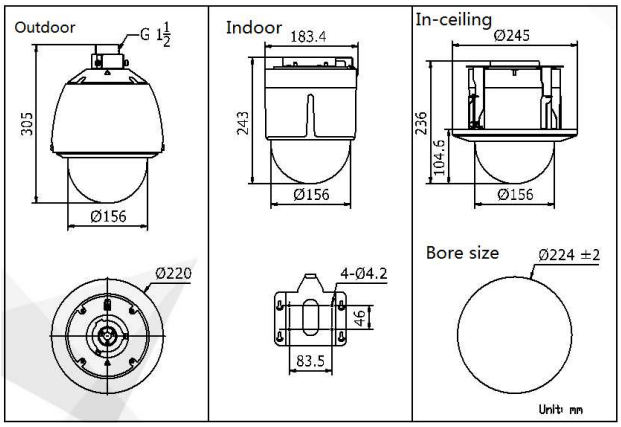

Accessories

DS-1602ZJ	DS-1602ZJ-Conner	DS-1602ZJ-Pole	DS-1602ZJ-Box
Wall Mount	Conner Mount	Pole Mount	Box Mount

Distributed by

Headquarters
No.555 Qianmo Road, Binjiang District,
Hangzhou 310051, China
T +86-571-8807-5998
overseasbusiness@hikvision.com

Hikvision USA
T +1-909-895-0400
sales.usa@hikvision.com

Hikvision Europe
T +31-23-5542770
saleseuro@hikvision.com

Hikvision Middle East
T +971-4-8816086
salesme@hikvision.com

Hikvision Russia
T +7-495-669-67-99
saleru@hikvision.com

Hikvision India
T +91-22-28469900
sales@pramahikvision.com

Hikvision Italy
T +39-0438-6902
info.it@hikvision.com

Hikvision France
T +33(0)1-85-330-444
info.fr@hikvision.com

Hikvision Spain
T +34-91-737-16-55
info.es@hikvision.com

Hikvision Poland
T +48-22-460-01-50
poland@hikvision.com

Hikvision UK
T +44-1628-9021-4
support.uk@hikvision.com

Hikvision Singapore
T +65-6684-4718
sg@hikvision.com

Hikvision Oceania
T +61-2-8599-4233
salesau@hikvision.com

Hikvision Hong Kong
T +852-2151-1761

© Hikvision Digital Technology Co., Ltd. 2015 | Data subject to change without notice |